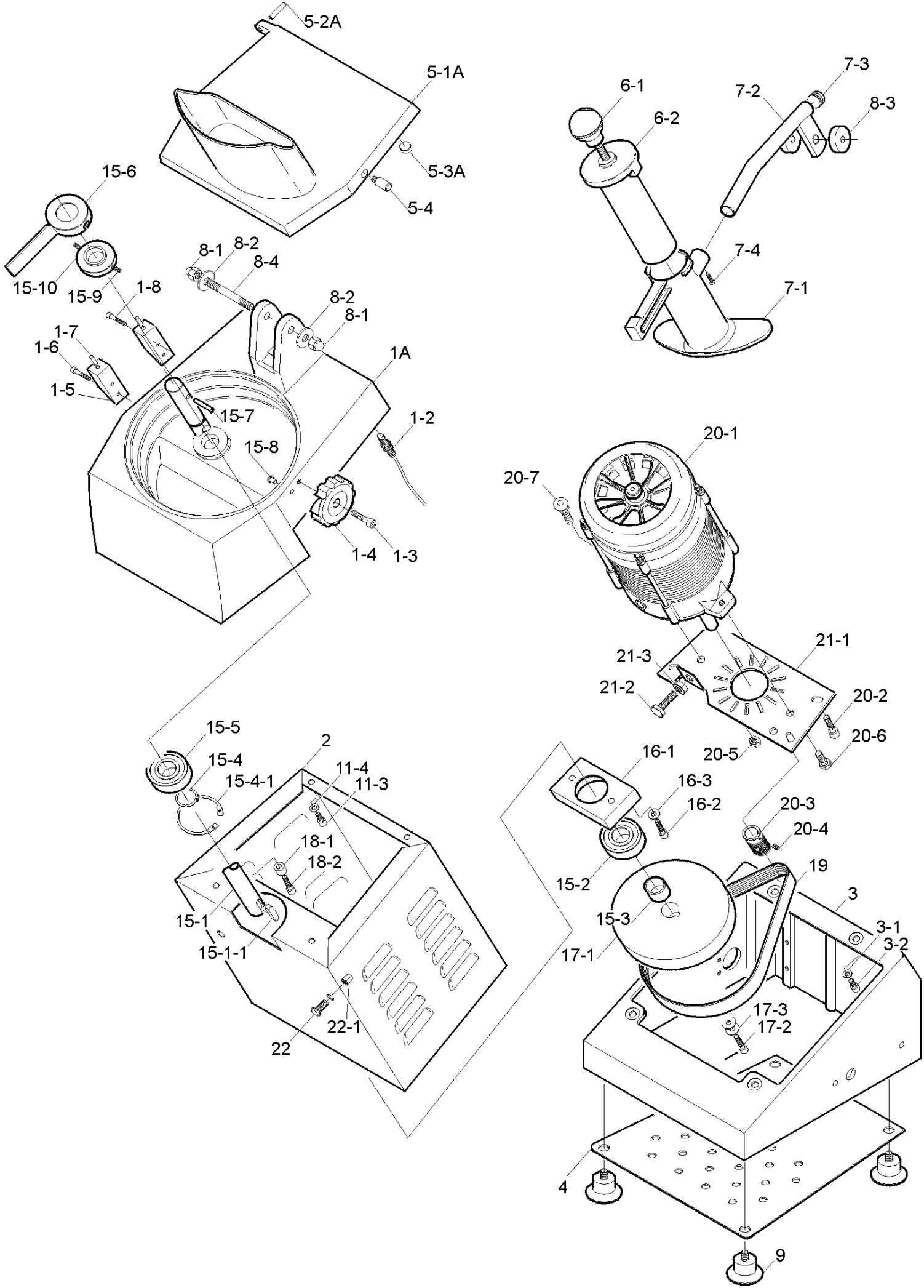
5-2A
5-1A
5-3A
5-4
6-1
6-2
7-3
7-2
8-3
7-4
7-1
15-6
15-10
15-9
8-1
8-2
8-4
1-8
8-2
8-1
1-7
1-6
1-5
1A
15-7
15-8
1-2
1-4
1-3
20-1
20-7
21-1
21-3
21-2
20-2
20-6
20-5
15-5
15-4
15-4-1
2
11-4
11-3
16-1
16-3
16-2
20-3
20-4
18-1
18-2
15-2
19
3
15-1
15-1-1
15-3
17-1
3-1
3-2
17-3
17-2
22-1
22
4
9

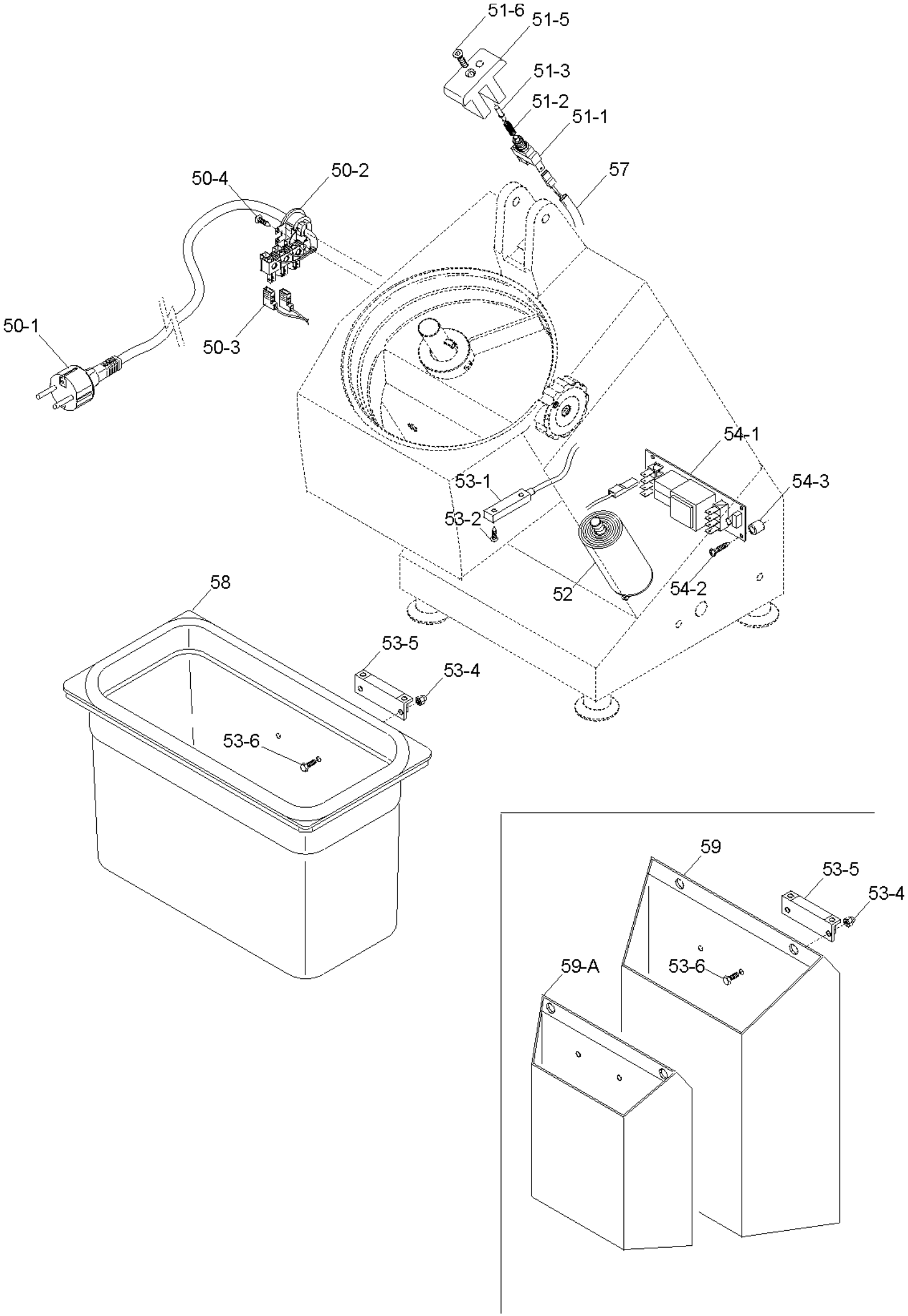
51-6
51-5
51-3
51-2
51-1
57
50-4
50-2
50-1
50-3
54-1
53-1
54-3
53-2
52
54-2
58
53-5
53-4
53-6
59
53-5
53-4
59-A
53-6