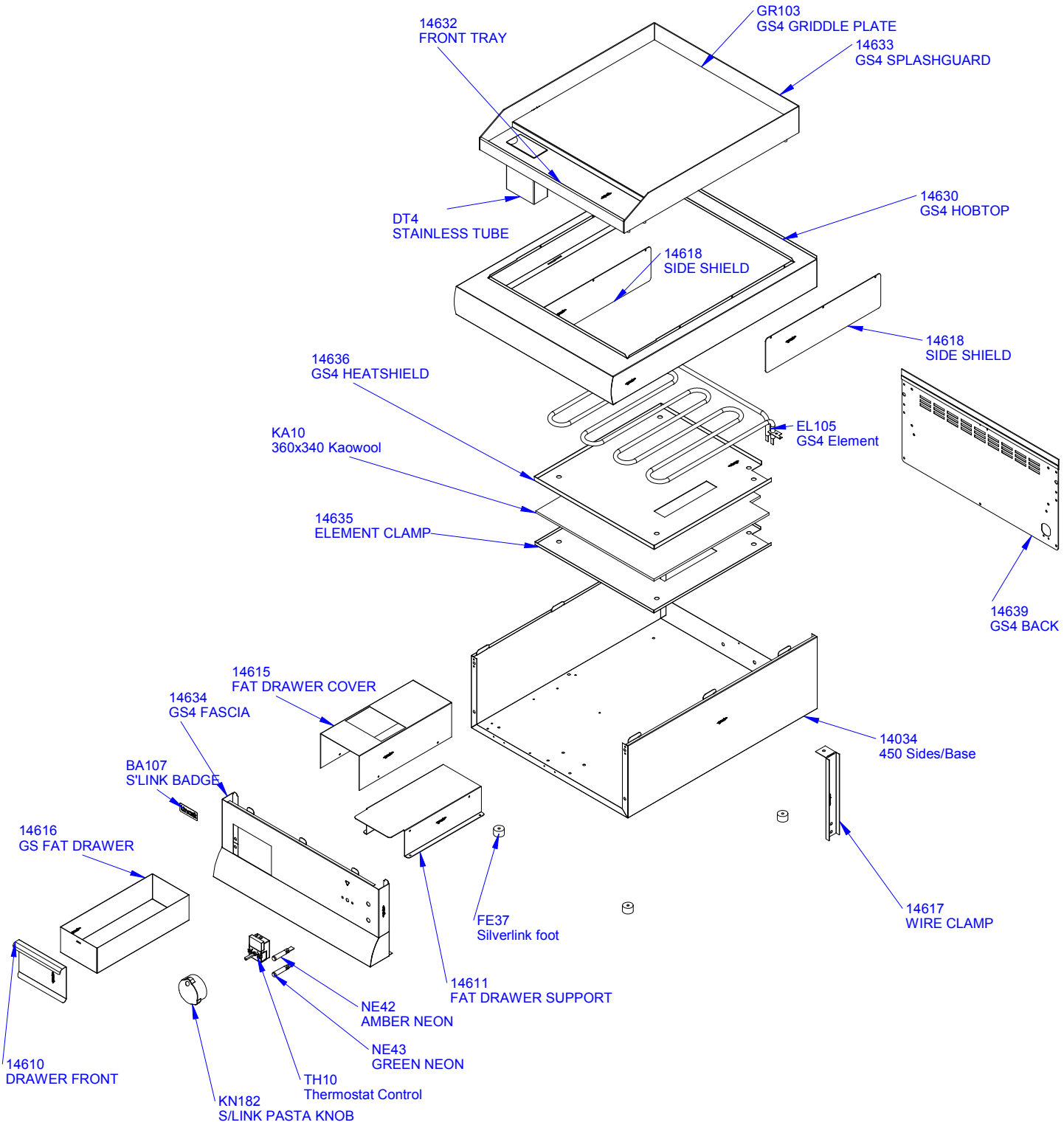

© LINCAT LIMITED,
WHISBY ROAD, LINCOLN, LN6 3QZ

GS4 Griddle

DWG No.	14625	ECN 2660 25/03/04	cliff stanton

Saved as GS4-A003 spares.dft